Rob Mods Active Blend Control (April, 2019)

This circuit is ideal if you want to blend two pickups with significantly different impedances and/or outputs. Or if you want to tweak the tone of one pickup without effecting the other.

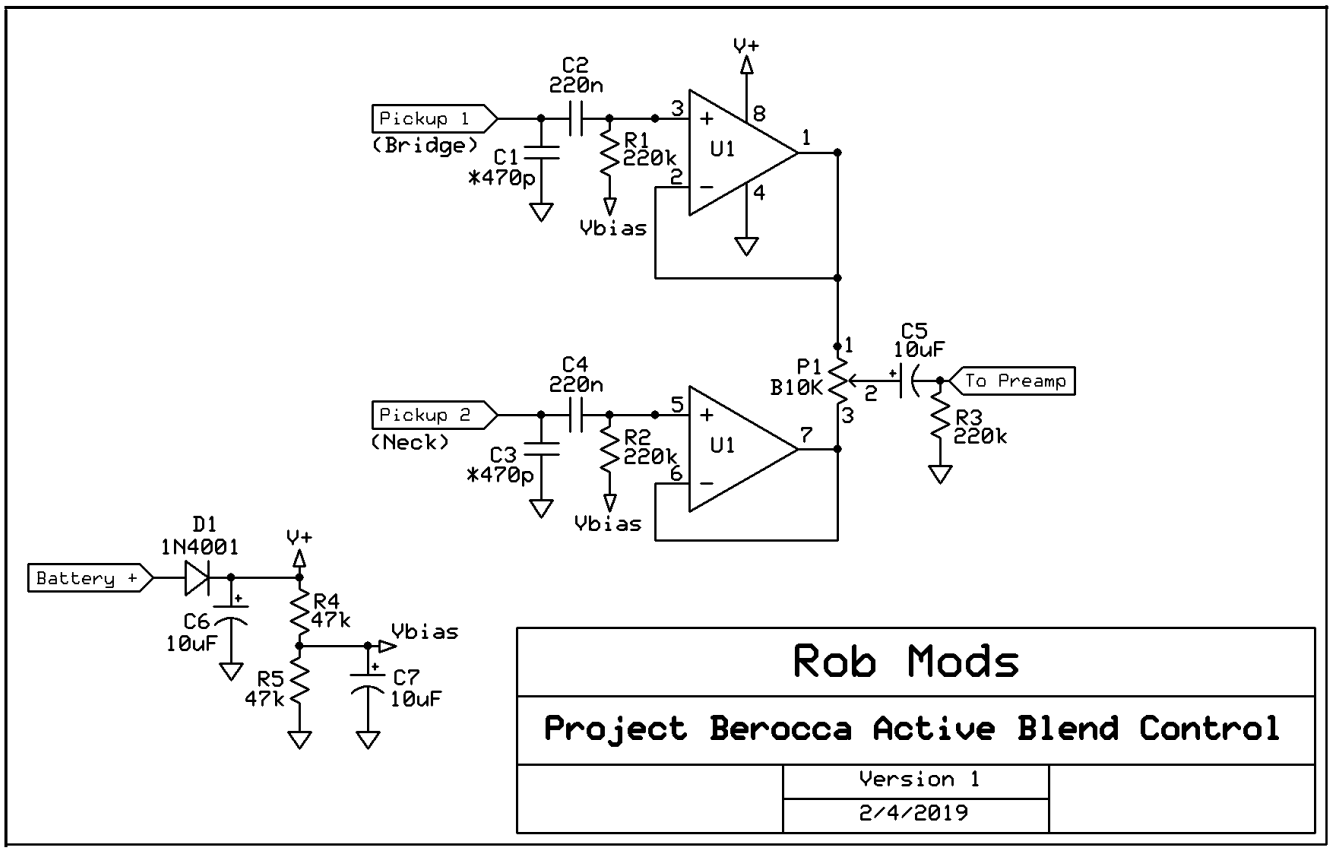

C1 and C3 are optional. These simulate the capacitive loading of a typical guitar cable. If you want one or both pickups to sound more 'passive' then this will lower the resonant frequency of the pickup.

R1 and R2 set the input impedance of each buffer and hence, the height of the pickup's resonant peak. If you have say, a typical Jazz Bass pickup, using C1, plus setting R1 to 100k will keep the pickup sounding very much as it did passively. With no C1 and say 470K for R1, that pickup will sound much brighter. Experiment! A breadboard is ideal for this.

The dual opamp chip can be just about any of the common audio ones. For low battery drain, but slightly higher noise, a TL062 or LF442 will be fine. For super low-noise performance, but much shorter battery life, LM833 or NE5532. A good compromise is a TL072 or an MC33178. If you use something else, be sure to check the pinout via its datasheet. If its pin assignment is different, you will have to design your own stripboard layout.

D1 protects the circuit from accidental reverse polarity. R4 and R5 form a voltage divider to supply the bias voltage (4.5v).

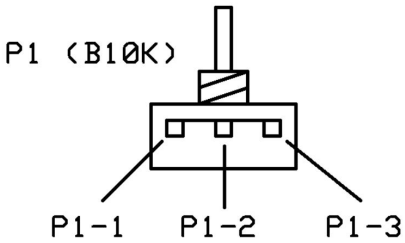

The blend pot itself (P1) can be any linear pot from 5K to 50k. But it should be no more than 1/5 of the input impedance of the preamp that it feeds.

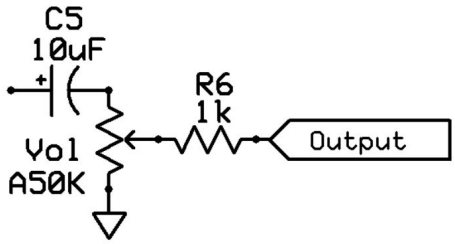

For stand alone operation,
substitute R3 for volume pot.
(A25K/A50K/A100k)

As shown the circuit is designed to feed a preamp, but for standalone operation, you'll need to add a volume control on the output. This can be any audio taper pot that is at least 5 times the value of the blend pot and is wired as shown, replacing R3. R6 is added in the interests of stability when driving the capacitive load of your guitar cable. There is no place on the board layout for this. It should be wired with two flying leads between the volume pot and the jack, and covered with a length of heatshrink.

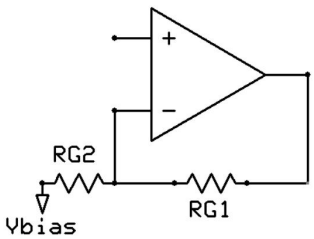

GAIN = (RG1+RG2)/RG2

GAIN	RG1	RG2
1 (0dB)	Wire Link	Omit
1.4 (3dB)	3k9	10k
2 (6dB)	10k	10k
2.8 (9dB)	18k	10k
4 (12dB)	30k	10k

If you need to add gain to one or both pickups, the wire link between pins 1 & 2, and/or pins 6 & 7 should be replaced with RG1. (It will need to be stood up on one end.) You also need to add a resistor from pin 2 and/or pin 6 to Vbias. This is called RG2 and there is a place on either side of the board for these should you need them.

Gain is expressed as a multiplier. In other words how much the input voltage is multiplied by the circuit to obtain the output voltage. For 3 dB, the output voltage is 1.4 times the input voltage. 6 dB of gain is double the input voltage. For 12 dB, the multiplier is 4. The relationship of RG1 and RG2 determine the mount of gain. The formula is shown on the schematic and I've listed a few examples.

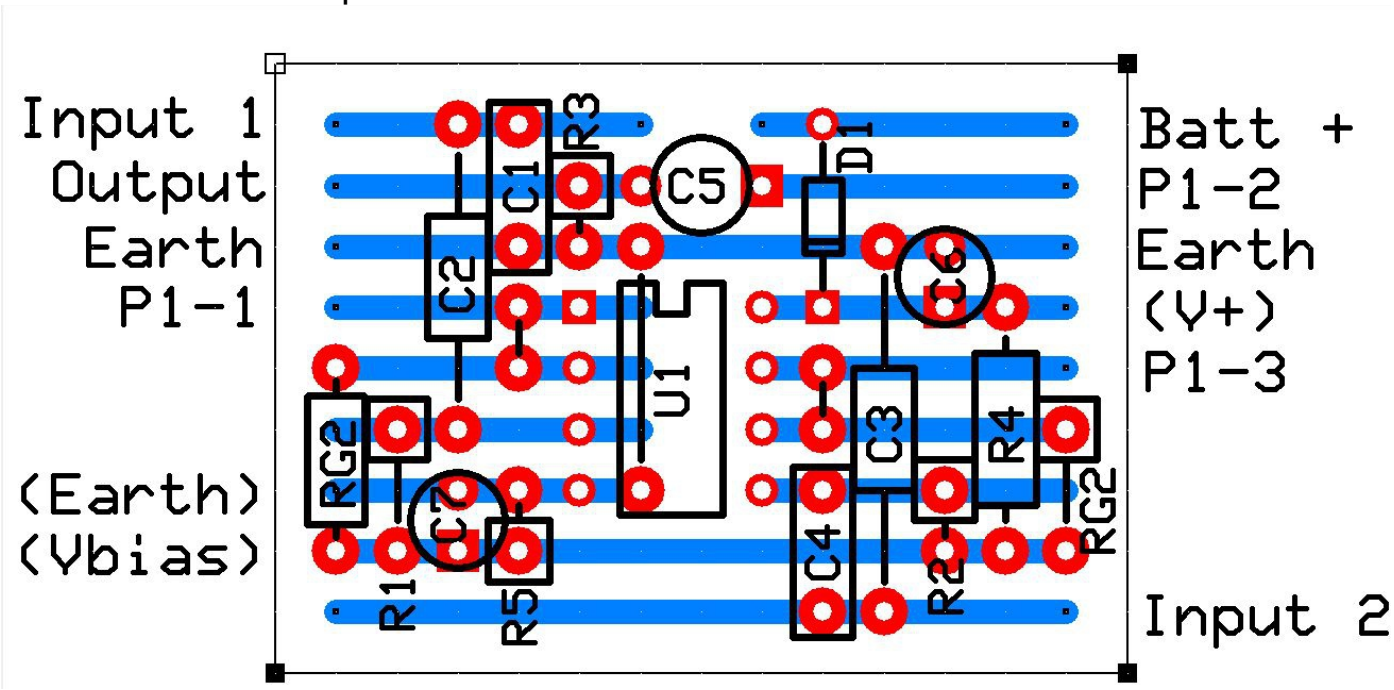

A simple stripboard layout is included. The components are closely packed and several resistors are installed stood up on one end. This makes it a bit fiddly to put together, but was done to make it as small as possible. Be sure to install the wire link that goes from the earth strip to pin 4 of the IC first. Make sure the diode, the IC, and the electrolytic caps are installed the right way around. I also recommend using an IC socket.

This board is very simple and quick to make. Stripboard can be cut easily by scoring with a stanley knife on both sides then snapping. The tracks can be cut with a Dremel tool.

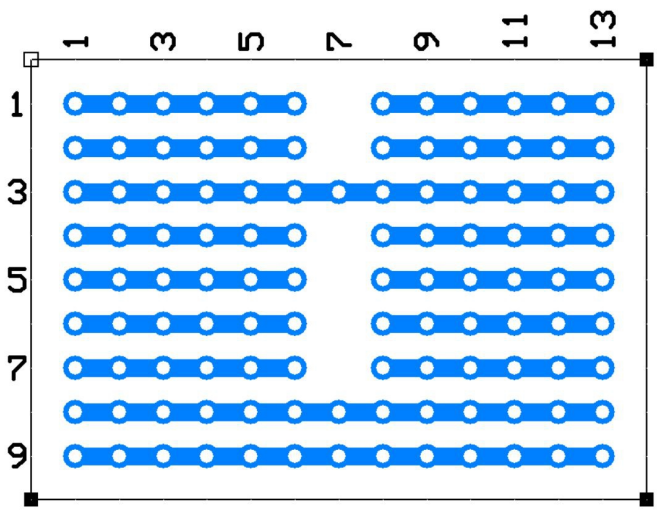

All resistors should be metal film type, ½ or ¼ watt. C1,3 can be disk ceramic, green caps, or MKTs. C2,4 should be MKT or monolithic caps. (A 220n green cap will probably be too big for the board.) C5,6,7 should be 25v electrolytic (for 18V max operation).

Once all the wires are added, and their colours are noted, the completed circuit board should be covered in a length of heatshrink. It should be installed with double-sided tape or at least have its movement limited with cable-ties.

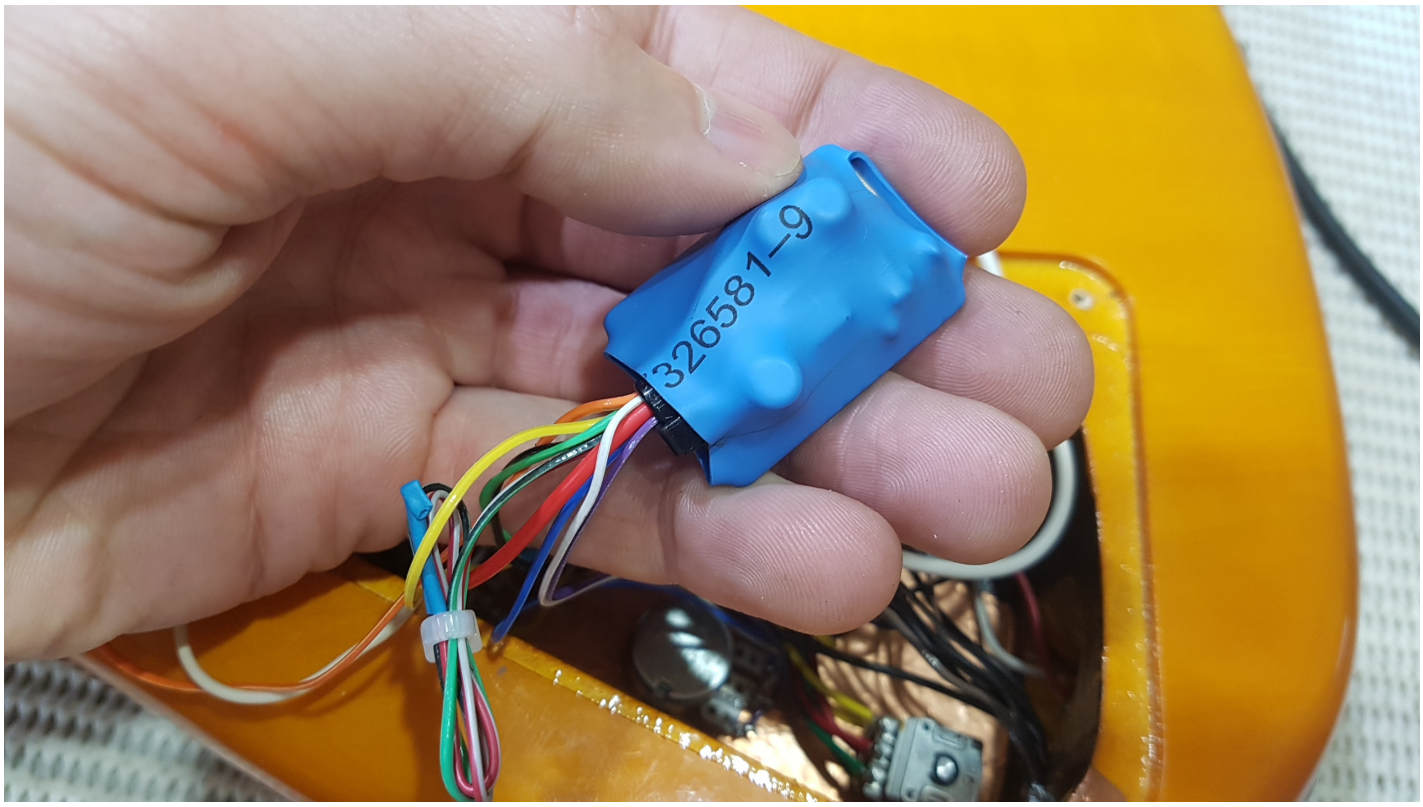

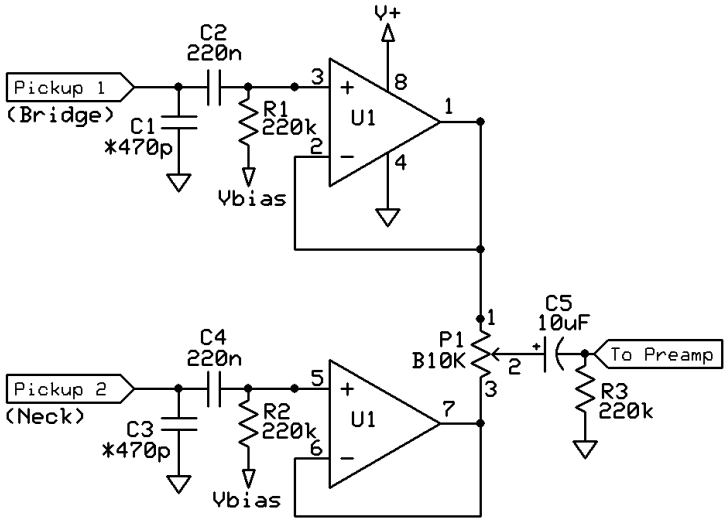

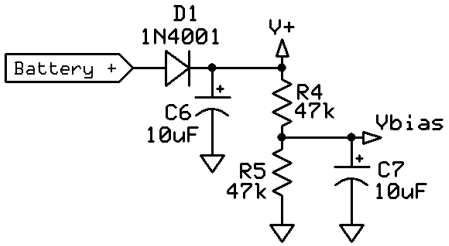

*Cable Cap (Optional).
R1, R2: Input Z resistors, adjust to taste!
U1: TL062, TL072, LF442, LM1458, MC33178 etc.
R1-6: 1/4W metal film.
C1-4: disc, mkt, greencap, etc.
C5-7: 25v electrolytic.

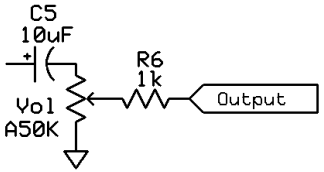

For stand alone operation,
substitute R3 for volume pot.
(A25K/A50K/A100k)

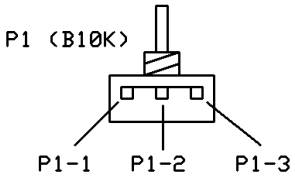

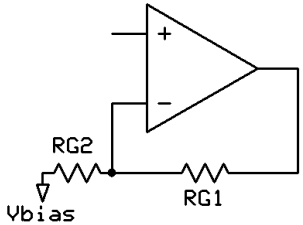

GAIN = (RG1+RG2)/RG2

GAIN	RG1	RG2
1 (0dB)	Wire Link	Omit
1.4 (3dB)	3k9	10k
2 (6dB)	10k	10k
2.8 (9dB)	18k	10k
4 (12dB)	30k	10k

Rob Mods

Project Berocca Active Blend Control

Version 1

2/4/2019

Typical Installation

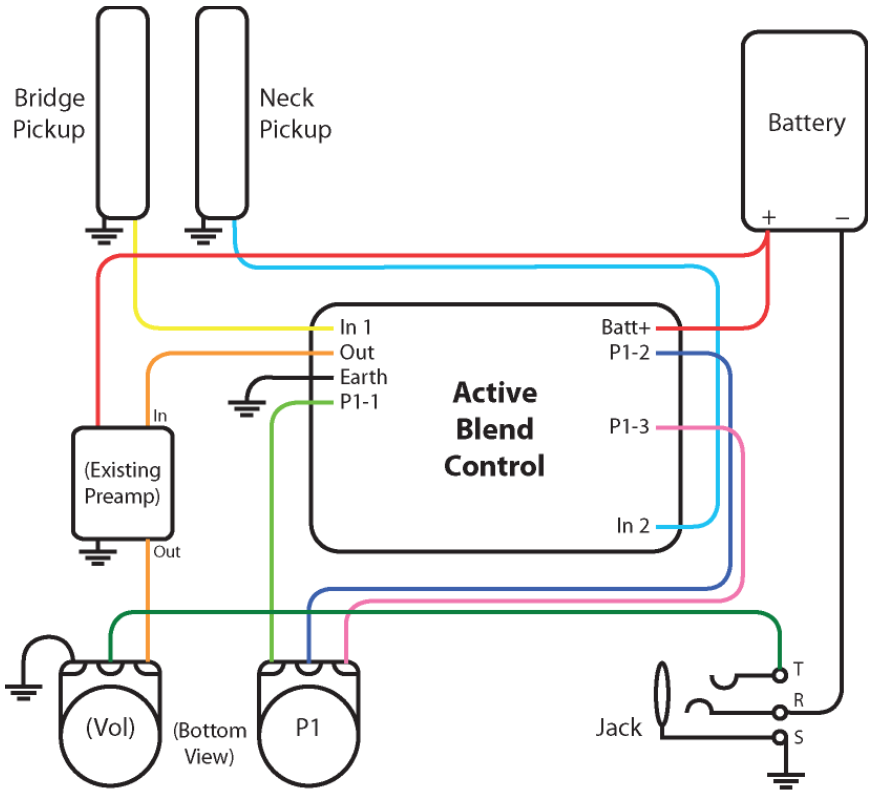

Standalone Installation